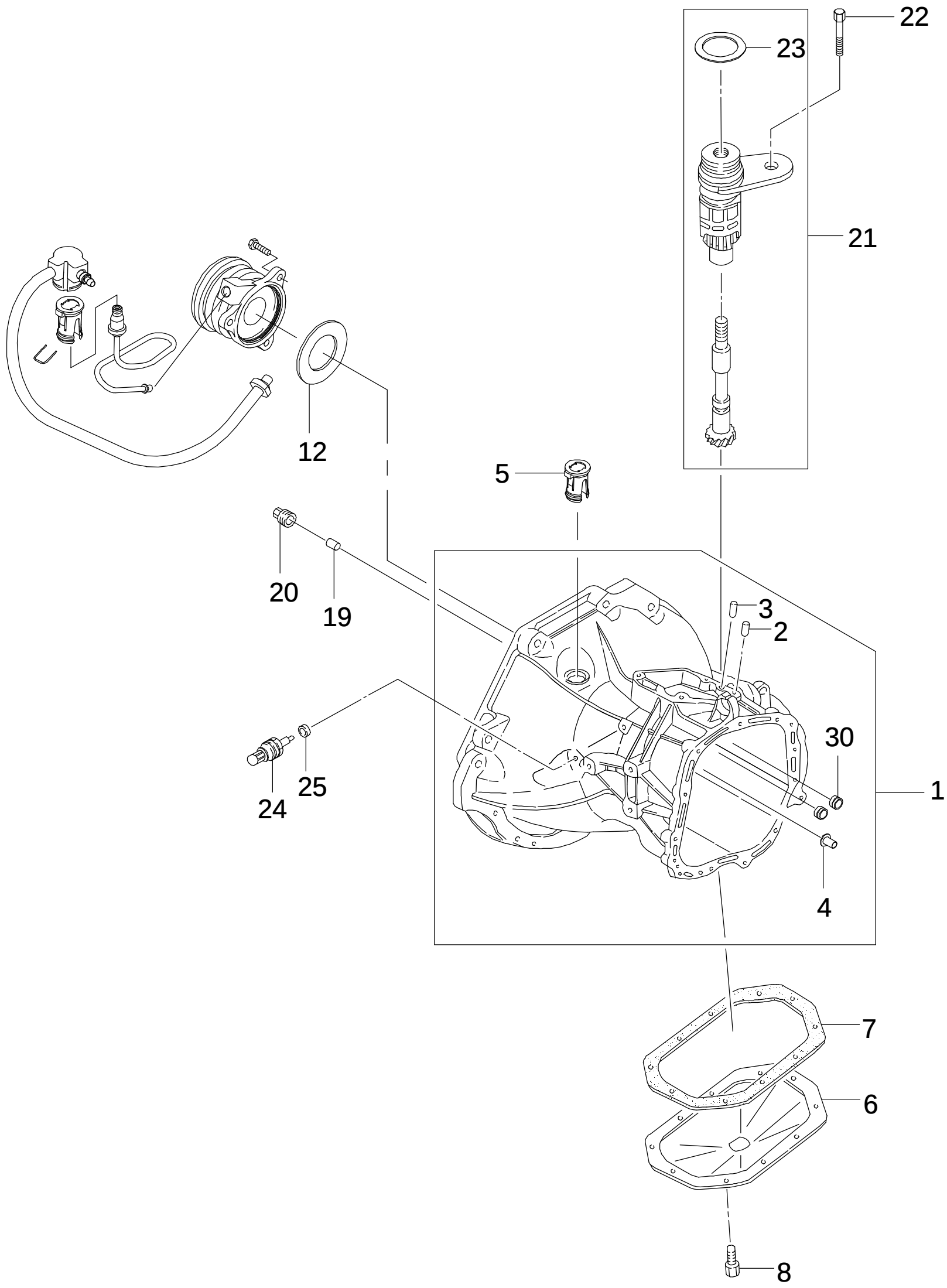

RJ3220 10/30/2004

TRANSAXLE RELATED PARTS

KEY NO.			PART NAME																		
						MODEL									EFFECTIVE POINT						
						BODY			LEVEL						VIN1		VIN2				
ITC	PART NO.	CHG	MYF	MYT	DRV	4N	4H	5W	I	II	III	L/R	QTY	PNC	P/CODE	FROM	TO	FROM	TO	OPTION	REMARKS
1	CASE A-T/A																				
96344248			03	06		B	B	B	X	X	X		1							&L14/L44/L84/LDA&MG4/MG5	
2	PIN-DOWEL																				
94580607			03	06		B	B	B	X	X	X		1							&L14/L44/L84/LDA&MG4/MG5	
3	PIN-DOWEL																				
94580507			03	06		B	B	B	X	X	X		2							&L14/L44/L84/LDA&MG4/MG5	
4	SLEEVE																				
94580549			03	06		B	B	B	X	X	X		1							&L14/L44/L84/LDA&MG4/MG5	
5	BUSH																				
96292092			03	06		B	B	B	X	X	X		1							&L14/L44/L84/LDA&MG4/MG5	
6	COVER-DIFF GEAR																				
94580751			03	06		B	B	B	X	X	X		1							&L14/L44/L84/LDA&MG4/MG5	
7	GASKET-DIFF GEAR COVER																				
96179241			03	06		B	B	B	X	X	X		1							&L14/L44/L84/LDA&MG4/MG5	
8	SCREW																				
94500952			03	06		B	B	B	X	X	X		10							&L14/L44/L84/LDA&MG4/MG5	
12	RING-O																				
94580546			03	06		B	B	B	X	X	X		1							&L14/L44/L84/LDA&MG4/MG5	50.5x2.2
19	PLUG																				
94535685			03	06		B	B	B	X	X	X		1							&L14/L44/L84/LDA&MG4/MG5	
20	MAGNET																				
94580016			03	06		B	B	B	X	X	X		1							&L14/L44/L84/LDA&MG4/MG5	
21	GEAR A-DRIVEN,SPEEDOMETER																				
90375764			03	06		B	B	B	X	X	X		1							&L14/L44/L84/LDA&MG4/MG5	
22	BOLT																				
94500765			03	06		B	B	B	X	X	X		1							&L14/L44/L84/LDA&MG4/MG5	
23	RING-O																				
94535508			03	06		B	B	B	X	X	X		1							&L14/L44/L84/LDA&MG4/MG5	
24	SWITCH A-BACK UP LIGHT																				
96192077			03	06		B	B	B	X	X	X		1							&L14/L44/L84/LDA&MG4/MG5	
25	WASHER																				
94525096			03	06		B	B	B	X	X	X		1							&L14/L44/L84/LDA&MG4/MG5	
30	BUSH																				
90334359			03	06		B	B	B	X	X	X		2							&L14/L44/L84/LDA&MG4/MG5	