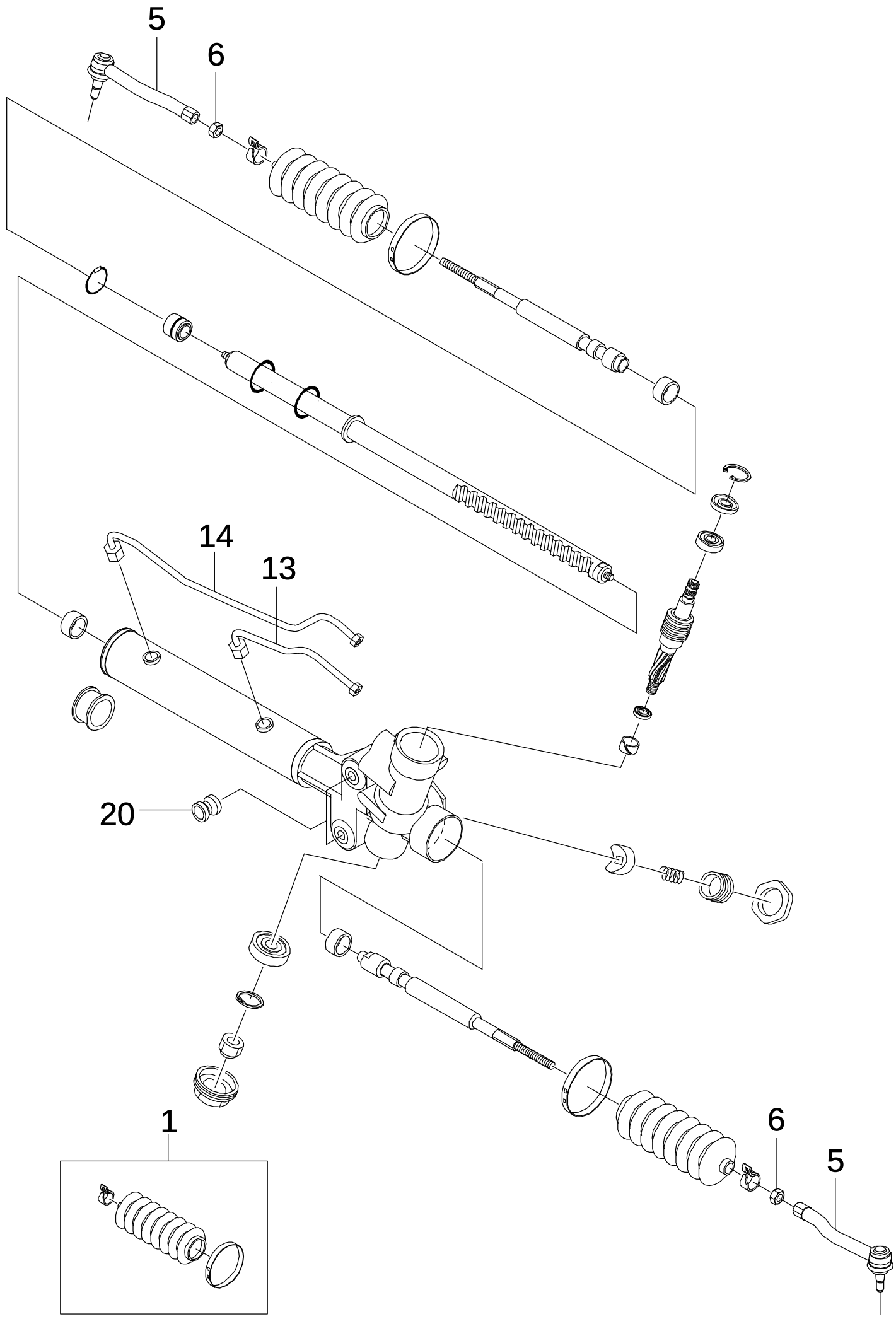

RJ4931 10/30/2004

STEERING GEAR PARTS(III)

KEY NO.			PART NAME																		
						MODEL										EFFECTIVE POINT					
						BODY			LEVEL							VIN1		VIN2			
ITC	PART NO.	CHG	MYF	MYT	DRV	4N	4H	5W	I	II	III	L/R	QTY	PNC	P/CODE	FROM	TO	FROM	TO	OPTION	REMARKS
1			BOOT KIT																		
	93742552	AD	04	06		B	B	B	X	X	X		2								
5			END-TIE ROD																		
	96407485	CH	04	06		B	B	B	X	X	X	LH	1							&N40/UXA	
	96407486	CH	04	06		B	B	B	X	X	X	RH	1							&N40/UXA	
6			NUT																		
	94515052	CH	04	06		B	B	B	X	X	X		2							&N40/UXA	
13			PIPE A-P/STRG GEAR																		
	93742553	AD	04	06	L	B	B	B	X	X	X		1								
	93742554	AD	04	06	R	B	B	B	X	X	X		1								
14			PIPE A-P/STRG GEAR																		
	93742555	AD	04	06	L	B	B	B	X	X	X		1								
	93742556	AD	04	06	R	B	B	B	X	X	X		1								
20			GROMMET																		
	93742557	AD	04	06		B	B	B	X	X	X		2								