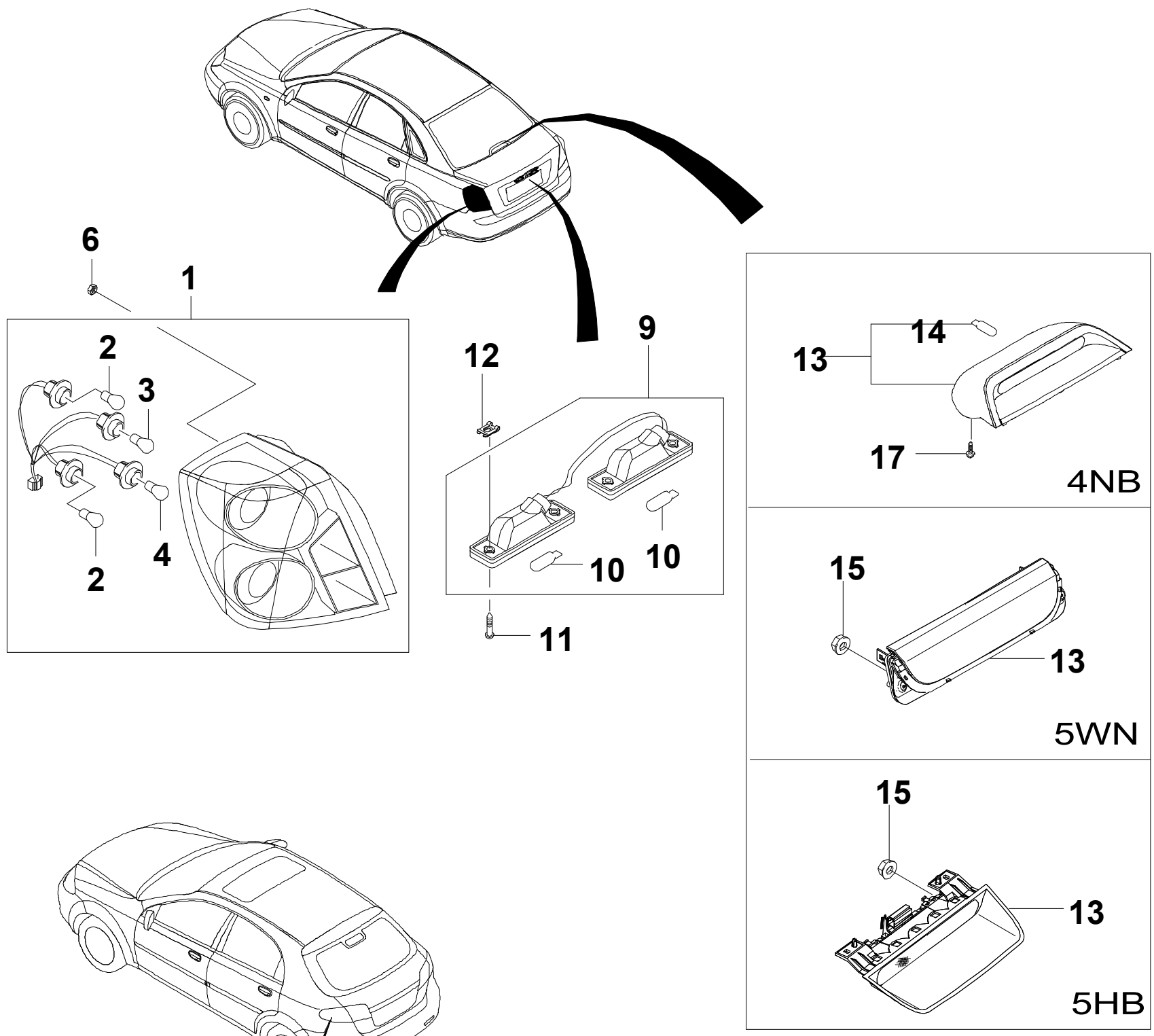

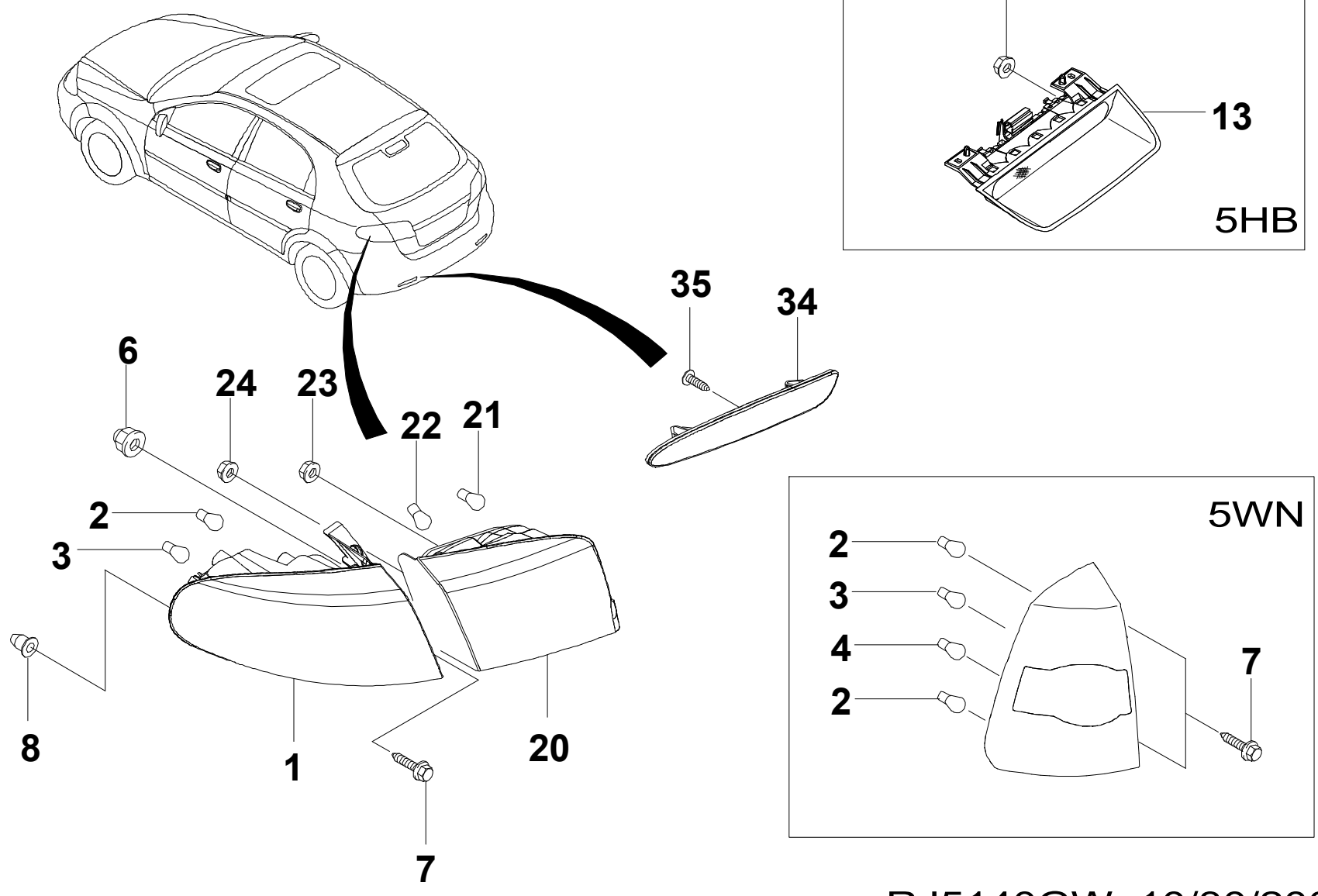

RJ5140GW 10/30/2004

REAR LAMP I

KEY NO.			PART NAME																		
						MODEL									EFFECTIVE POINT						
						BODY			LEVEL						VIN1		VIN2				
ITC	PART NO.	CHG	MYF	MYT	DRV	4N	4H	5W	I	II	III	L/R	QTY	PNC	P/CODE	FROM	TO	FROM	TO	OPTION	REMARKS
	1		LAMP A-RR COMB																		
	96551223		04	06		B	.	.	X	X	X	LH	1		EA					&FL8&T98	
	96551224		04	06		B	.	.	X	X	X	RH	1		EA					&FL8&T98	
	96387724		04	06		.	B	.	X	X	X	LH	1		EG					&FL8&T98	
	96387725		04	06		.	B	.	X	X	X	RH	1		EG					&FL8&T98	
	96412803		05	06		.	.	B	X	X	X	LH	1		DK					&FL8&T98	
	96412804		05	06		.	.	B	X	X	X	RH	1		DK					&FL8&T98	
	2		BULB																		
	94535564		04	06		B	B	B	X	X	X		2							&FL8	STOP LAMP
	94535564		04	06		B	.	B	X	X	X		2							&FL8	TAIL LAMP
	94535560		04	06		B	.	B	X	X	X		2							&FL8&T98	RR FOG
	3		BULB																		
	94535561		04	06		B	.	B	X	X	X		2							&FL8	T/SIGNAL
	4		BULB																		
	94535560		04	06		B	B	B	X	X	X		2							&FL8	B/UP LAMP
	6		NUT																		
	94515096		04	06		B	.	.	X	X	X		8								RR COMB.
	94515242		04	06		.	B	B	X	X	X		8								RR COMB.
	7		SCREW																		
	94520499		04	06		.	B	B	X	X	X		4								
	8		RETAINER																		
	96260548		04	06		.	B	B	X	X	X		4								
	9		LAMP A-LICENSE																		
	96190751		04	06		B	B	B	X	X	X		1		LD						
	10		BULB																		
	94535581		04	06		B	B	B	X	X	X		2								LICENSE LAMP
	11		SCREW																		
	94520166		04	06		B	B	B	X	X	X		4								
	12		NUT																		
	94515254		04	06		B	B	B	X	X	X		4								
	13		LAMP A-HIGH MT STOP																		
	96461922	AD	04	06		B	.	.	X	X	X		1		ZB					&82I&T93	
	96551214		04	06		.	B	.	X	X	X		1		SC					&T93	
	96410973		05	06		.	.	B	X	X	X		1		S0					&T93	
	14		BULB																		
	94535581		04	06		B	B	B	X	X	X		5							&T93	CTR H/STOP LAMP
	15		NUT																		
	94515248		04	06		.	B	.	X	X	X		2							&T93	
	94515115		05	06		.	.	B	X	X	X		2								
	17		SCREW																		
	94520208		04	06		B	B	.	X	X	X		4							&T93	
	20		LAMP A-EXTN																		
	96551216		04	06		.	B	.	X	X	X	LH	1		ED					&FL8&T98	
	96551217		04	06		.	B	.	X	X	X	RH	1		EF					&FL8&T98	
	21		BULB																		
	94535560		04	06		.	B	.	X	X	X		2							&FL8	BACK UP
	22		BULB																		
	94535560		04	06		.	B	.	X	X	X		2							&FL8&T98	RR FOG LAMP
	23		NUT																		
	94515115		04	06		.	B	.	X	X	X		4								
	24		NUT																		
	94515211		04	06		.	B	.	X	X	X		4								
	34		REFLECTOR A-REFLEX,RR																		
	96551202		04	06		.	B	.	X	X	X	LH	1		XA						
	96551203		04	06		.	B	.	X	X	X	RH	1		XA						
	96410971		05	06		.	.	B	X	X	X	LH	1		XB						
	96410972		05	06		.	.	B	X	X	X	RH	1		XB						
	35		SCREW																		
	94520339		04	06		.	B	B	X	X	X		2								