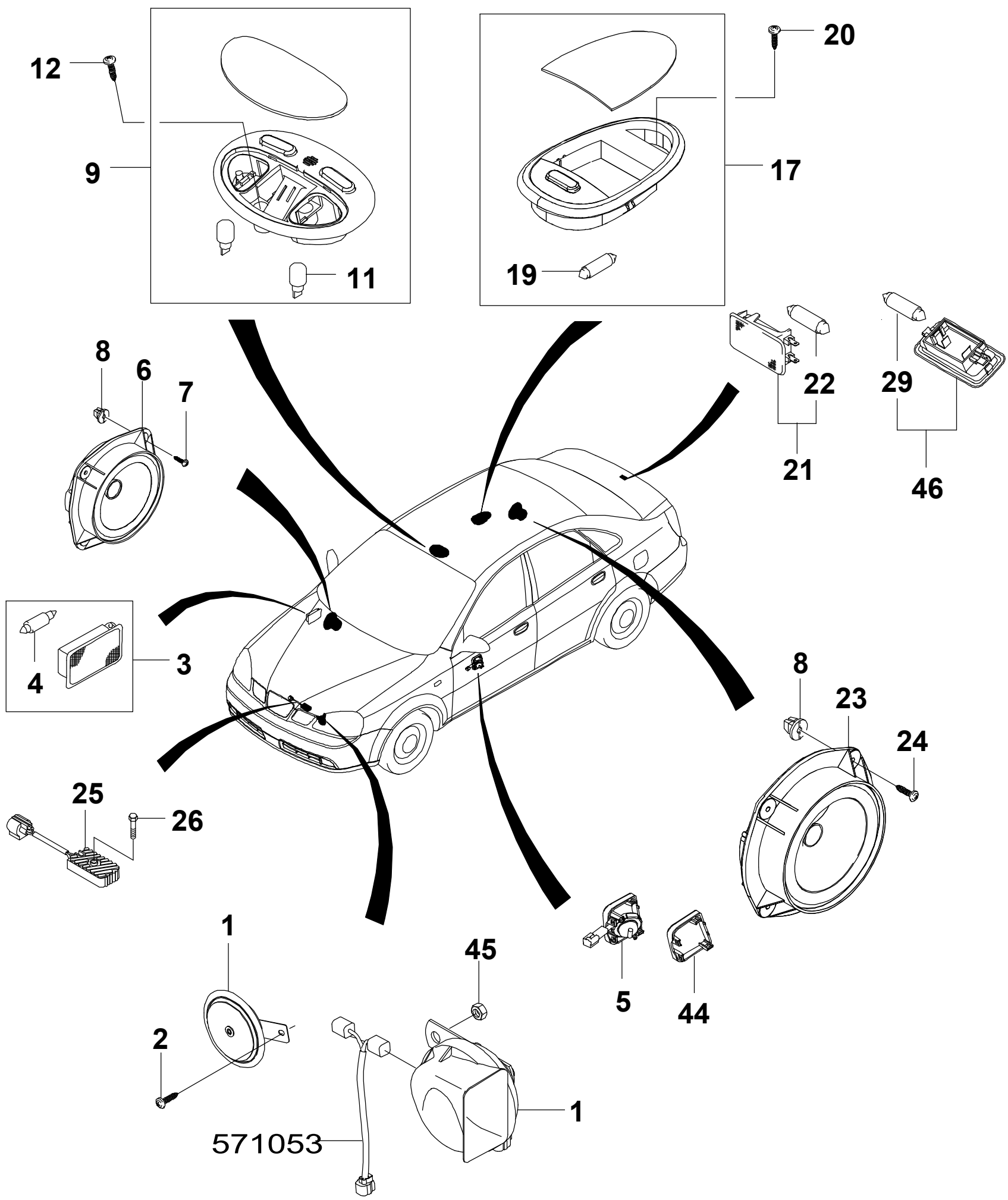

RJ5410GW 11/04/2004

ELECTRICAL PARTS

KEY NO.			PART NAME																		
						MODEL										EFFECTIVE POINT					
						BODY			LEVEL							VIN1		VIN2			
ITC	PART NO.	CHG	MYF	MYT	DRV	4N	4H	5W	I	II	III	L/R	QTY	PNC	P/CODE	FROM	TO	FROM	TO	OPTION	REMARKS
	1		HORN A																		
	96336790		04	06		B	B	B	X	X	X	RH	1		GL					-U07	
	96349111		04	06		B	B	B	X	X	X	LH	1		FH					&U07	HIGH
	96349109		04	06		B	B	B	X	X	X	RH	1		FL					&U07	LOW
	2		BOLT																		
	94500295		04	06		B	B	B	X	X	X		2							&U07	
	94500233		04	06		B	B	B	X	X	X		1							-U07	
	3		LAMP A-PASS COMPT																		
	96247399	AD	04	06		B	B	B	X	X	X		1		GB					&U27	
	4		BULB																		
	94535588	AD	04	06		B	B	B	X	X	X		1							&U27	
	5		SPEAKER-BALANCE TWEETER																		
	96470071		04	06		B	.	.	X	X	X	LH	1		KT		921218			&UX5/U93	FRT
Y	96550651		04	06		B	.	.	X	X	X	LH	1		LT	921219				&UX5/U93	FRT
	96550651	AD	04	06		B	.	.	X	X	X	LH	1		LT					&UX5	RR
	96470072		04	06		B	.	.	X	X	X	RH	1		MT		921218			&UX5/U93	FRT
Y	96550657		04	06		B	.	.	X	X	X	RH	1		RT	921219				&UX5/U93	FRT
	96550657	AD	04	06		B	.	.	X	X	X	RH	1		RT					&UX5	RR
	6		SPEAKER A-FRT																		
	96453084		04	06		B	B	B	X	X	X	LH	1		F4					&UX5/U90/U93-UAX/UV7	
	96453562		04	06		B	B	B	X	X	X	RH	1		F3					&UX5/U90/U93-UV7	
	7		SCREW																		
	94520183		04	06		B	B	B	X	X	X		8								
	8		NUT																		
	94515248		04	06		B	B	B	X	X	X		8								
	94515248		04	06		B	B	B	X	X	X		8								
	9		LAMP A-MAP,FRT																		
	96615323		04	06		B	B	B	X	X	X		1		MB					&82I&C99-CF6/UAX	
	96615327		04	06		B	B	B	X	X	X		1		MF					&82I&CF6&C99-UAX	
	11		BULB																		
	94535600		04	06		B	B	B	X	X	X		2							&C99	FRT MAP LAMP
	12		SCREW																		
	94520339		04	06		B	B	B	X	X	X		2							&C99	
	17		LAMP A-ROOM,CTR																		
	96615319		04	06		B	.	B	X	X	X		1		NB					&82I&C95	
	96615321		04	06		.	B	.	X	X	X		1		ND					&82I&C94	
	19		BULB																		
	94535591		04	06		B	B	B	X	X	X		1								CTR ROOM LAMP
	20		SCREW																		
	94520344		04	06		B	B	B	X	X	X		2								
	21		LAMP A-PASS COMPT																		
	96247398		04	06		B	B	.	X	X	X		1		TR						
	22		BULB																		
	94535591		04	06		B	B	.	X	X	X		1								
	23		SPEAKER A-RR																		
	96453086		04	06		B	B	B	X	X	X	LH	1		R3					&UX5/U90/U93-UV7	
	96453582		04	06		B	B	B	X	X	X	RH	1		R2					&UX5/U90/U93-UV7	
	24		SCREW																		
	94520183		04	06		B	B	B	X	X	X		8								
	25		RESISTOR A-COOLING FAN																		
	96614412		04	06		B	B	.	X	X	.		1							&L14&MG5	
	96614412		04	06		B	B	.	X	X	X		1							&C46&L44/L84	
	26		BOLT																		
	94500203		04	06		B	B	.	X	X	.		1							&L14&MG5	
	94500203		04	06		B	B	.	X	X	X		1							&C46&L44/L84	
	29		BULB																		
	94535590		05	06		.	.	B	X	X	X		1								
	44		GRILLE-TWEETER																		
	96550653		04	06		B	.	.	X	X	X	LH	1							&U90	
	96550654		04	06		B	.	.	X	X	X	RH	1							&U90	
	45		NUT																		
	94515292		04	06		B	B	B	X	X	X		2							&U07	
	46		LAMP A-ROOM,LUGGAGE																		
	96412484		05	06		.	.	B	X	X	X		1		HB					&82I	