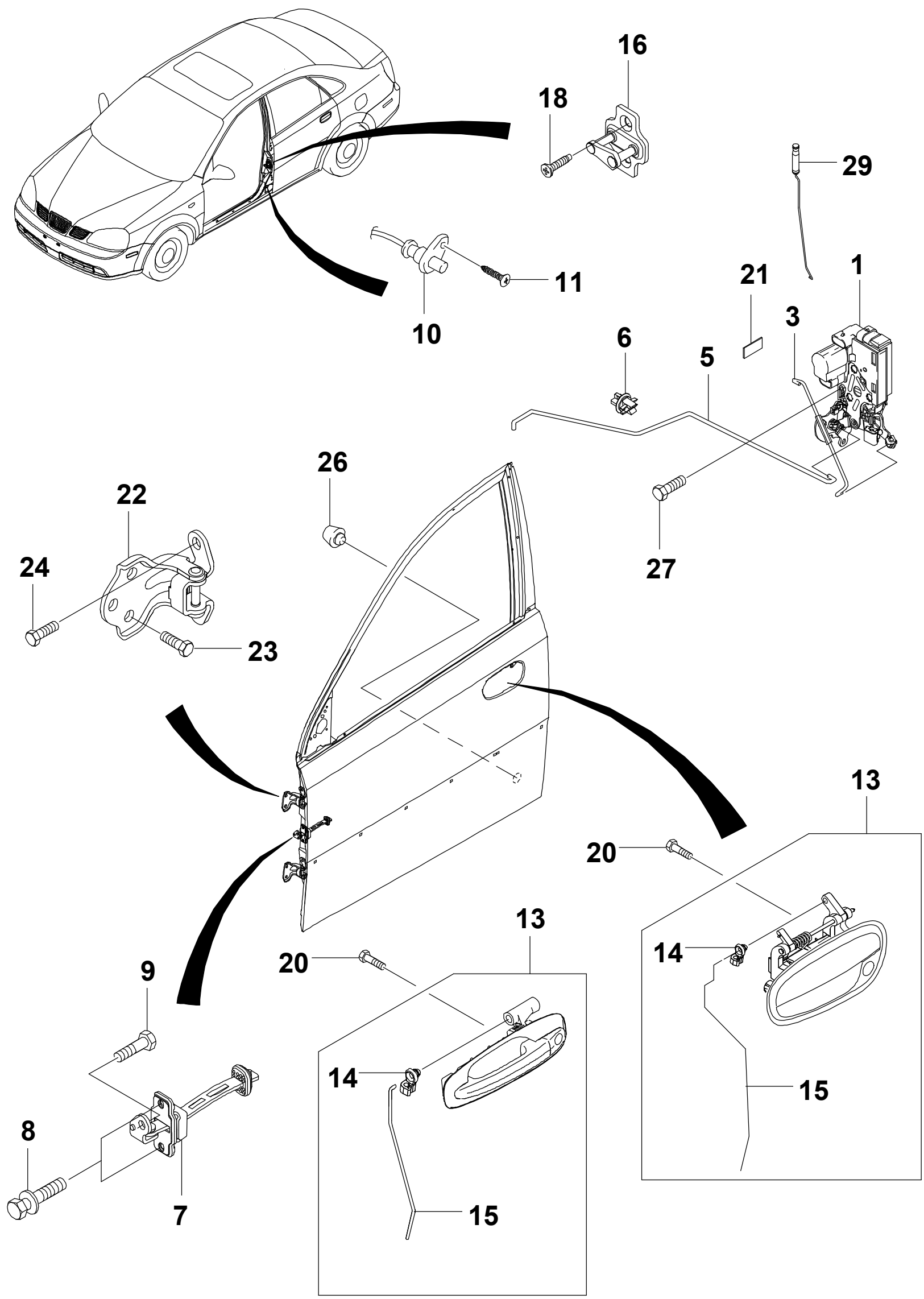


RJ6220 10/30/2004

# FRONT DOOR LOCK

| KEY NO. | | | PART NAME | | | | | | | | | | | | | | | | | | | |
|---|---|---|---|---|---|---|---|---|---|---|---|---|---|---|---|---|---|---|---|---|---|---|
| | | | | | | MODEL | | | | | | | | | | EFFECTIVE POINT | | | | | | |
| | | | | | | BODY | | | LEVEL | | | | | | | VIN1 | | VIN2 | | | | |
| ITC | PART NO. | CHG | MYF | MYT | DRV | 4N | 4H | 5W | I | II | III | L/R | QTY | PNC | P/CODE | FROM | TO | FROM | TO | OPTION | REMARKS |
| | 1 | | LATCH A-FRT DR | | | | | | | | | | | | | | | | | | |
| | 96272638 | | 04 | 06 | L | . | B | . | X | . | . | LH | 1 | | ML | | | | | -AU3 | |
| | 96272640 | | 04 | 06 | L | B | B | B | X | X | X | LH | 1 | | | | | | | &AU3-CAL/CW1 | |
| | 96272641 | | 04 | 06 | L | B | . | . | . | . | X | LH | 1 | | | | | | | &AU3&CW1-CAL | |
| | 96272641 | | 04 | 06 | L | B | B | B | X | X | X | LH | 1 | | | | | | | &AU3&CAL/CW1 | |
| | 96272639 | | 04 | 06 | L | . | B | . | X | . | . | RH | 1 | | | | | | | -AU3 | |
| | 96272642 | | 04 | 06 | L | B | B | B | X | X | X | RH | 1 | | | | | | | &AU3-CAL | |
| | 96272642 | | 04 | 06 | L | B | B | B | X | X | X | RH | 1 | | | | | | | &AU3 | |
| | 96272645 | | 04 | 06 | R | . | B | . | X | . | . | LH | 1 | | | | | | | -AU3 | |
| | 96272647 | | 04 | 06 | R | B | B | B | X | X | X | LH | 1 | | | | | | | &AU3-CAL | |
| | 96272647 | | 04 | 06 | R | B | B | B | X | X | X | LH | 1 | | | | | | | &AU3 | |
| | 96272646 | | 04 | 06 | R | . | B | . | X | . | . | RH | 1 | | | | | | | -AU3 | |
| | 96272648 | | 04 | 06 | R | B | B | B | X | X | X | RH | 1 | | | | | | | &AU3-CAL/CW1 | |
| | 96272649 | | 04 | 06 | R | B | . | . | . | . | X | RH | 1 | | | | | | | &AU3&CW1-CAL | |
| | 96272649 | | 04 | 06 | R | B | B | B | X | X | X | RH | 1 | | | | | | | &AU3&CAL/CW1 | |
| | 3 | | ROD-KEY CYL,DR | | | | | | | | | | | | | | | | | | |
| | 96548023 | | 04 | 04 | | B | B | B | X | X | X | LH | 1 | | | | | | | | |
| | 96548617 | | 05 | 06 | | B | B | B | X | X | X | LH | 1 | | | | | | | | |
| | 96548024 | | 04 | 04 | | B | B | B | X | X | X | RH | 1 | | | | | | | | |
| | 96548618 | | 05 | 06 | | B | B | B | X | X | X | RH | 1 | | | | | | | | |
| | 5 | | ROD-I/S HANDLE,FRT DR | | | | | | | | | | | | | | | | | | |
| | 96548025 | | 04 | 06 | | B | . | | X | X | X | LH | 1 | | | | | | | | |
| | 96548026 | | 04 | 06 | | B | . | | X | X | X | RH | 1 | | | | | | | | |
| | 96548489 | | 04 | 06 | | . | B | B | X | X | X | LH | 1 | | | | | | | | |
| | 96548490 | | 04 | 06 | | . | B | B | X | X | X | RH | 1 | | | | | | | | |
| | 6 | | CLIP | | | | | | | | | | | | | | | | | | |
| | 94530599 | | 04 | 06 | | B | B | B | X | X | X | | 2 | | | | | | | | |
| | 7 | | CHECK A-DR,FRT DR | | | | | | | | | | | | | | | | | | |
| | 96548021 | | 04 | 06 | | B | B | B | X | X | X | | 2 | | | | | | | | |
| | 8 | | BOLT | | | | | | | | | | | | | | | | | | |
| | 94500090 | | 04 | 06 | | B | B | B | X | X | X | | 4 | | | | | | | | |
| | 9 | | BOLT | | | | | | | | | | | | | | | | | | |
| | 94501540 | | 04 | 06 | | B | B | B | X | X | X | | 2 | | | | | | | | |
| | 10 | | SWITCH A-CONTACT,DR | | | | | | | | | | | | | | | | | | |
| | 96338784 | | 04 | 06 | | B | B | B | X | X | X | | 1 | | | | | | | | |
| | 96338783 | | 04 | 06 | | B | B | B | X | X | X | | 1 | | | | | | | | |
| | 11 | | SCREW | | | | | | | | | | | | | | | | | | |
| | 94520339 | | 04 | 05 | | B | B | . | X | X | X | | 2 | | | | | | | | |
| Y | 94520258 | CH | 04 | 05 | | B | B | B | X | X | X | | 2 | | | | 077952 | | | | |
| N | 94520177 | AD | 05 | 06 | | B | B | B | X | X | X | | 2 | | | 077953 | | | | | |
| | 13 | | HANDLE A-FRT DR,O/S | | | | | | | | | | | | | | | | | | |
| | 96615187 | | 04 | 04 | | . | B | . | X | . | . | LH | 1 | | | | | | | &BH3 | |
| | 96548041 | | 04 | 04 | | B | B | B | X | X | X | LH | 1 | | | | | | | &BH4 | |
| | 96547951 | | 05 | 06 | | B | B | B | X | X | X | LH | 1 | | | | | | | &BH4 | |
| | 96615188 | | 04 | 04 | | . | B | . | X | . | . | RH | 1 | | | | | | | &BH3 | |
| | 96548042 | | 04 | 04 | | B | B | B | X | X | X | RH | 1 | | | | | | | &BH4 | |
| | 96547952 | | 05 | 06 | | B | B | B | X | X | X | RH | 1 | | | | | | | &BH4 | |
| | 14 | | CLAMP | | | | | | | | | | | | | | | | | | |
| | 94530139 | | 04 | 06 | | B | B | B | X | X | X | | 2 | | | | | | | | |
| Y | 94530721 | CH | 04 | 06 | | B | B | B | X | X | X | | 2 | | | | | | | | |
| Y | 94530138 | AD | 04 | 06 | | B | B | B | X | X | X | | 2 | | | | | | | | |
| | 15 | | ROD-O/S HANDLE,FRT DR | | | | | | | | | | | | | | | | | | |
| | 96548059 | | 04 | 04 | | B | B | . | X | X | X | LH | 1 | | | | | | | | |
| | 96548060 | | 04 | 04 | | B | B | . | X | X | X | RH | 1 | | | | | | | | |
| | 96547977 | | 05 | 06 | | B | B | B | X | X | X | | 2 | | | | | | | | |
| | 16 | | STRIKER A-DR | | | | | | | | | | | | | | | | | | |
| | 96301668 | | 04 | 06 | | B | B | B | X | X | X | | 2 | | | | | | | | |
| | 18 | | BOLT | | | | | | | | | | | | | | | | | | |
| | 94501688 | | 04 | 06 | | B | B | B | X | X | X | | 4 | | | | | | | | |
| | 20 | | BOLT | | | | | | | | | | | | | | | | | | |
| | 94500073 | | 04 | 06 | | B | B | B | X | X | X | | 4 | | | | | | | | |
| | 21 | | STRIP-INSULATING | | | | | | | | | | | | | | | | | | |
| | 96288972 | | 04 | 06 | | B | B | B | X | X | X | | 2 | | | | | | | | |
| | 22 | | HINGE A-DR | | | | | | | | | | | | | | | | | | |
| | 96547421 | | 04 | 06 | | B | B | B | X | X | X | | 2 | | | | | | | &XCP | |
| | 96547289 | | 04 | 06 | | B | B | B | X | X | X | | 2 | | | | | | | &XCP | |
| | 23 | | BOLT | | | | | | | | | | | | | | | | | | |
| | 94500963 | | 04 | 06 | | B | B | B | X | X | X | | 10 | | | | | | | | |
| | 24 | | BOLT | | | | | | | | | | | | | | | | | | |
| | 94501318 | | 04 | 06 | | B | B | B | X | X | X | | 8 | | | | | | | | |
| | 26 | | BUMPER | | | | | | | | | | | | | | | | | | |
| | 96240768 | | 04 | 06 | | B | B | B | X | X | X | | 2 | | | | | | | | |
| | 27 | | BOLT | | | | | | | | | | | | | | | | | | |
| | 94501601 | | 04 | 06 | | B | B | B | X | X | X | | 6 | | | | | | | | |
| | 29 | | BUTTON-LOCKING,DR | | | | | | | | | | | | | | | | | | |
| | 96548338 | | 04 | 06 | | B | B | B | X | X | X | LH | 1 | | | | | | | &82I | |
| | 96548340 | | 04 | 06 | | B | B | B | X | X | X | RH | 1 | | | | | | | &82I | |