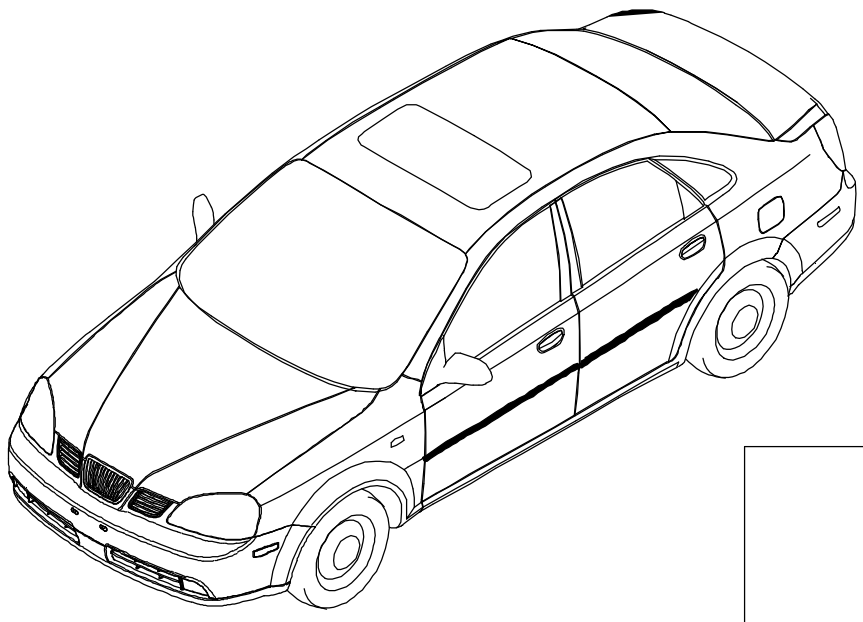

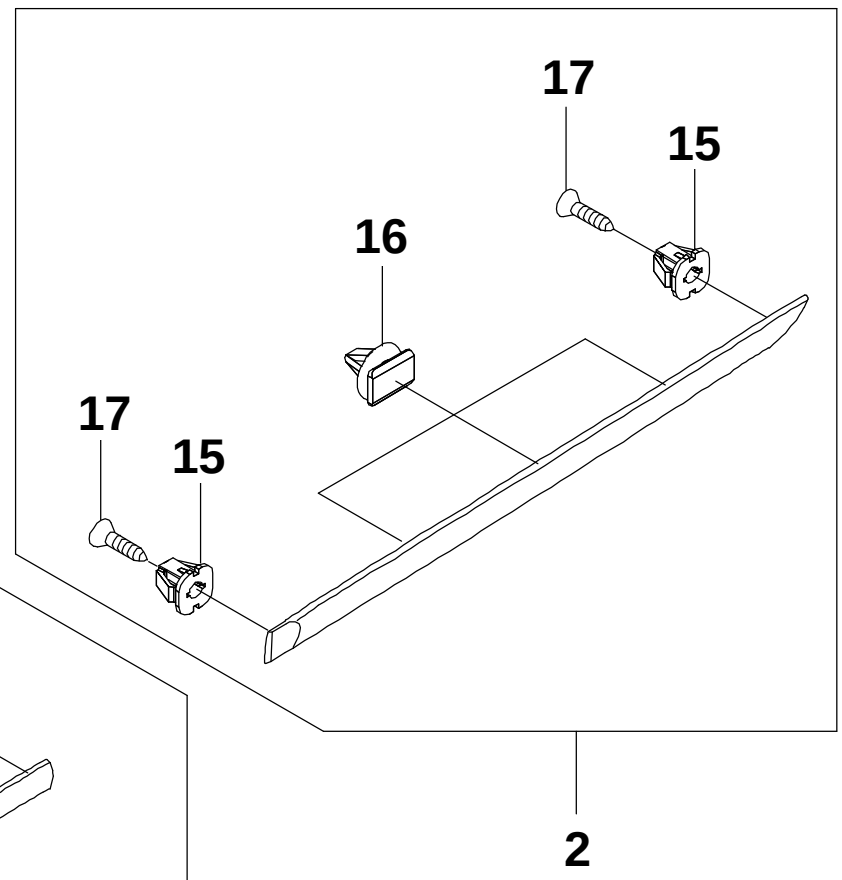

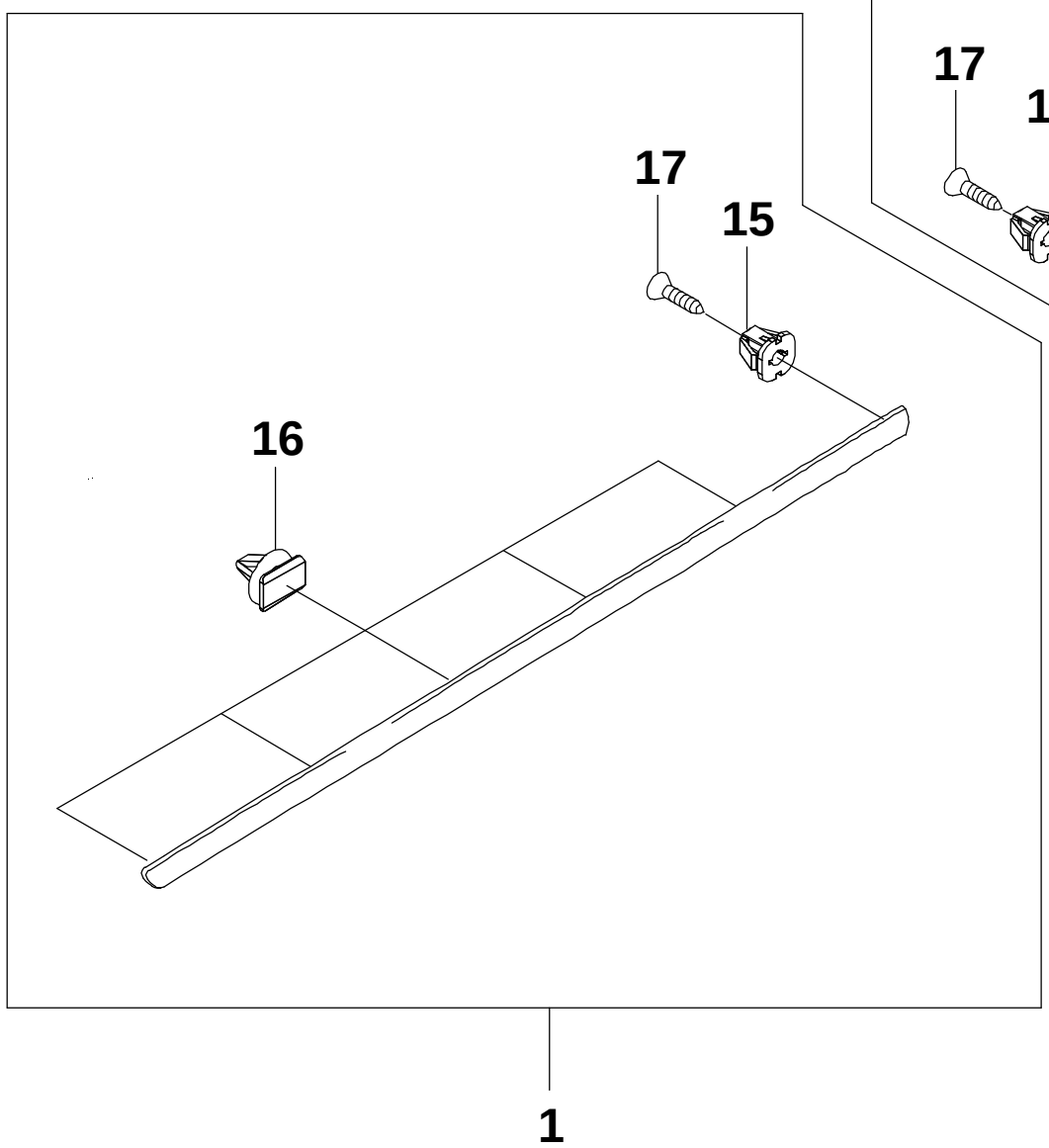

RJ6610 11/11/2004

LACETTI <WESTERN EUROPE>
SIDE BODY MOLDING

KEY NO.			PART NAME																			
						MODEL										EFFECTIVE POINT						
						BODY			LEVEL							VIN1		VIN2				
ITC	PART NO.	CHG	MYF	MYT	DRV	4N	4H	5W	I	II	III	L/R	QTY	PNC	P/CODE	FROM	TO	FROM	TO	OPTION	REMARKS
	1		MOLDING A-PROTV,FRT DR																		
	96545651		04	06		B	B	B	X	X	X	LH	1								
	96545652		04	06		B	B	B	X	X	X	RH	1								
	2		MOLDING A-PROTV,RR DR																		
	96545653		04	06		B	B	B	X	X	X	LH	1								
	96545654		04	06		B	B	B	X	X	X	RH	1								
	15		CLIP																		
	94530629	AD	04	06		B	B	B	X	X	X		6								
	16		CLIP																		
	94530542	AD	04	06		B	B	B	X	X	X		16								
	17		SCREW																		
	94520216	AD	04	06		B	B	B	X	X	X		6								