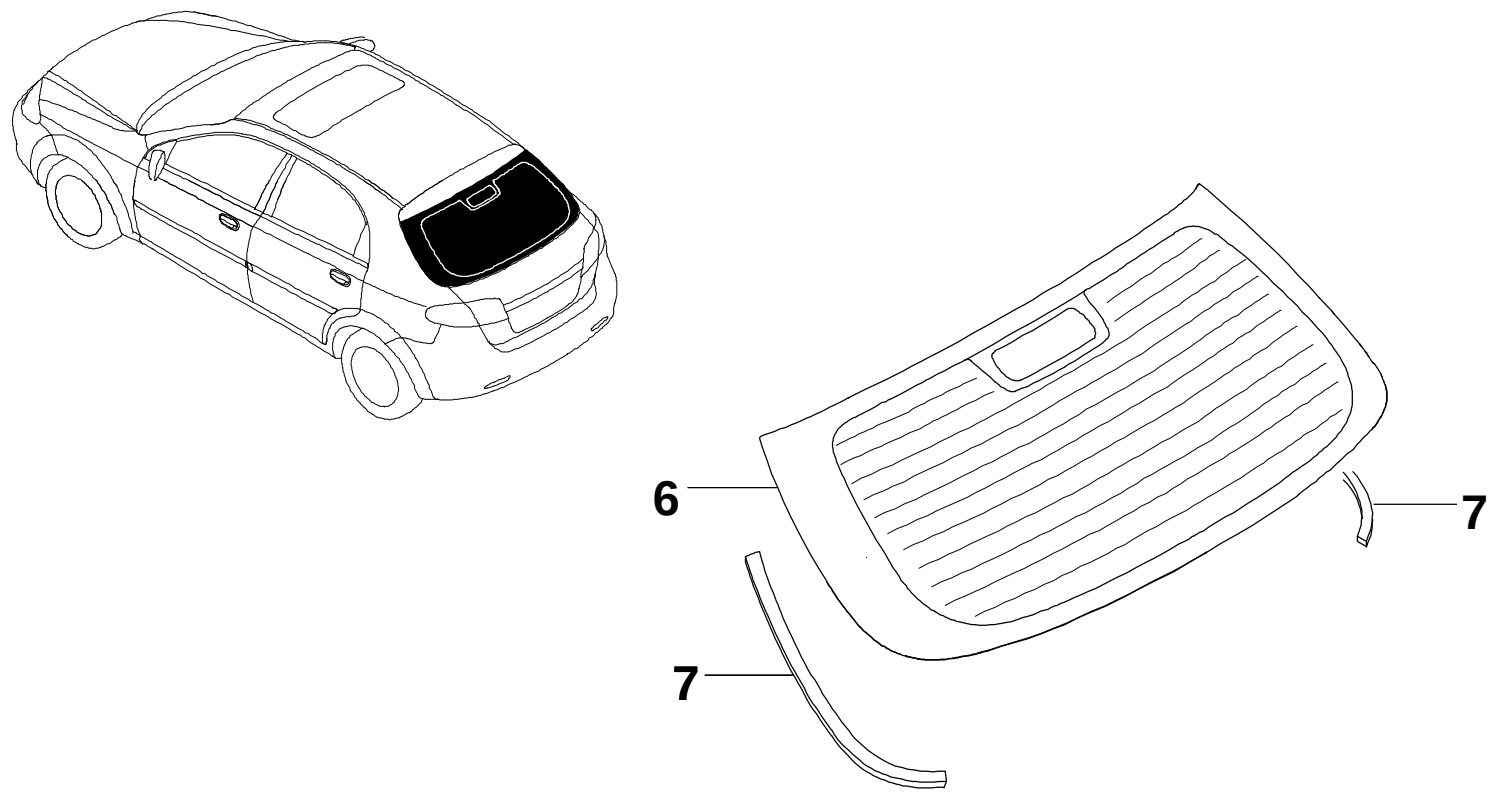

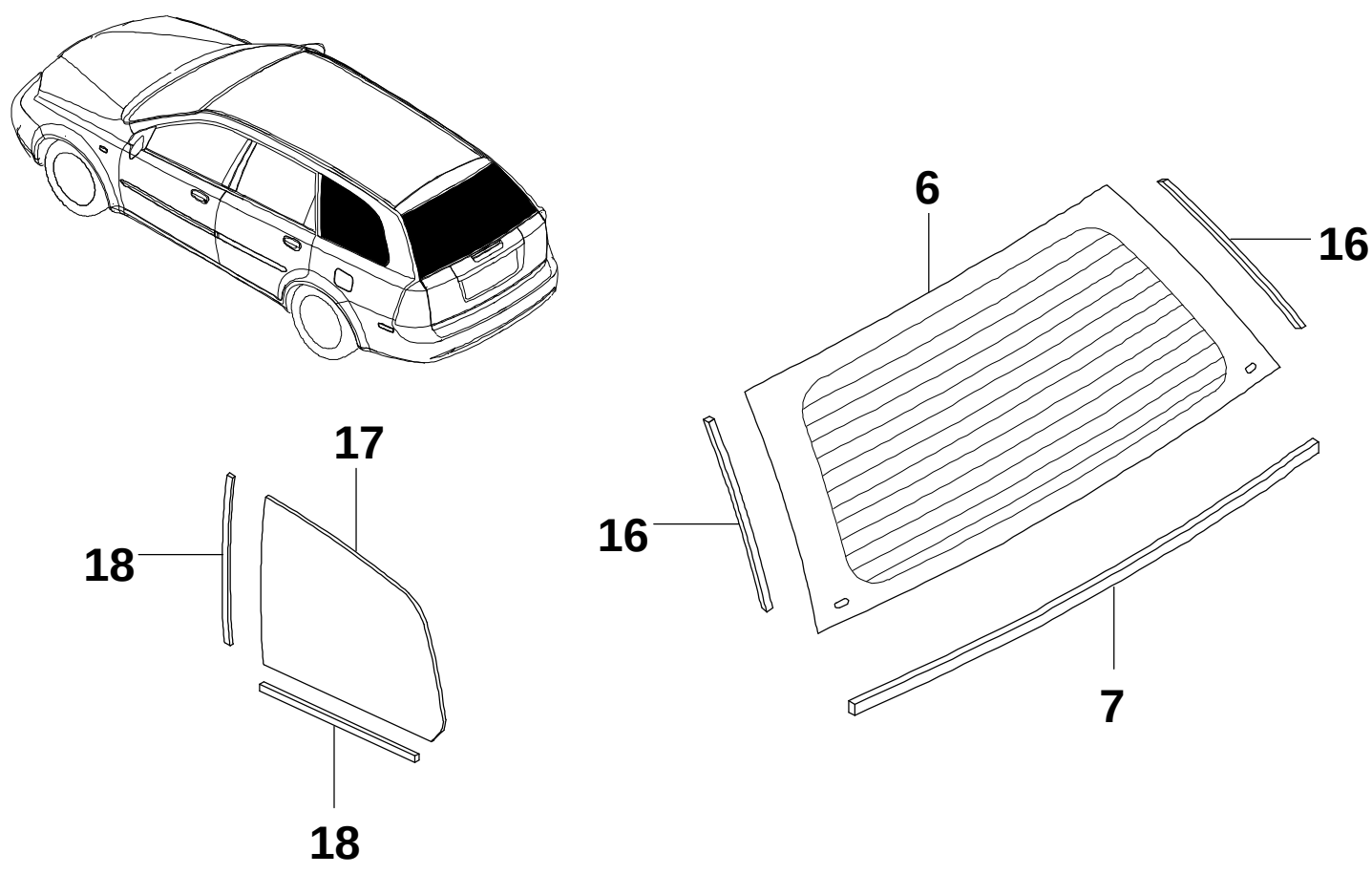

RJ6641GNW 12/14/2004

KEY NO.			PART NAME																		
						MODEL									EFFECTIVE POINT						
						BODY			LEVEL						VIN1		VIN2				
ITC	PART NO.	CHG	MYF	MYT	DRV	4N	4H	5W	I	II	III	L/R	QTY	PNC	P/CODE	FROM	TO	FROM	TO	OPTION	REMARKS
	6		GLASS A-T/GATE																		
	96548927	CH	04	04		.	B	.	X	X	X		1				029476			&T93	
N	96424031	AD	04	06		.	B	.	X	X	X		1			029477				&T93	
	96617939		05	06		.	.	B	X	X	X		1								
	7		MOLDING A-GLASS,T/GATE																		
	96490146		04	06		.	B	.	X	X	X	LH	1								
	96490147		04	06		.	B	.	X	X	X	RH	1								
	96617940	CH	05	06		.	.	B	X	X	X		1								
	16		DAM-GLASS,T/GATE																		
	96617944	AD	05	06		.	.	B	X	X	X		2								
	17		GLASS A-QUARTER WDO																		
	96617321		05	06		.	.	B	X	X	X	LH	1								
	96617322		05	06		.	.	B	X	X	X	RH	1								
	18		DAM-GLASS,QUATER																		
	96617323	CH	05	06		.	.	B	X	X	X		2								
	96430980	AD	05	06		.	.	B	X	X	X		2								QUARTER GRASS,LOW