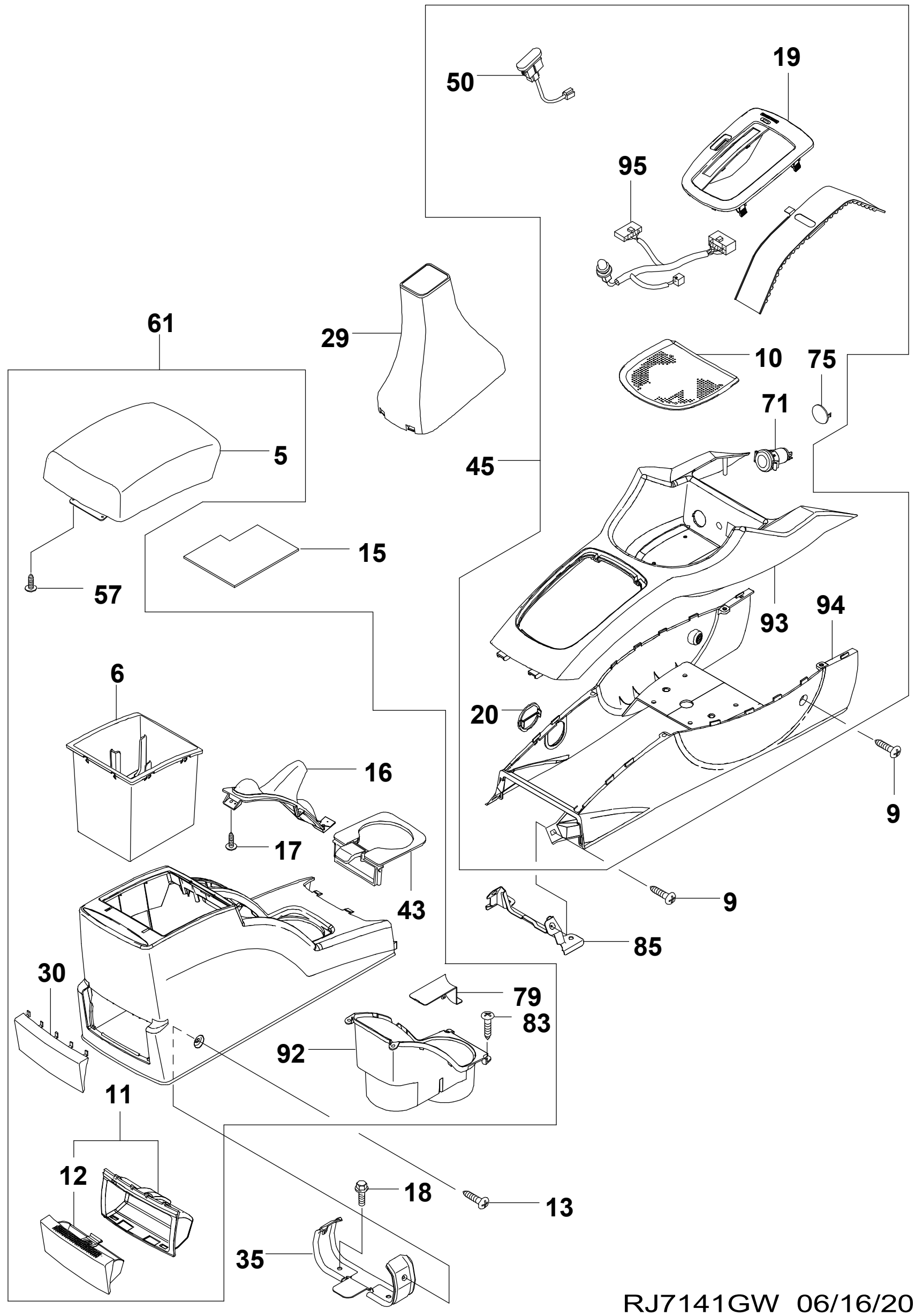

RJ7141GW 06/16/2005

CONSOLE

KEY NO.			PART NAME																		
						MODEL										EFFECTIVE POINT					
						BODY			LEVEL							VIN1		VIN2			
ITC	PART NO.	CHG	MYF	MYT	DRV	4N	4H	5W	I	II	III	L/R	QTY	PNC	P/CODE	FROM	TO	FROM	TO	OPTION	REMARKS
5			LID A-CNSL,RR																		
	96399824		04	06		B	B	B	.	X	X		1				072386			&82I&D02	
Y	96425944		04	06		B	B	B	.	X	X		1			072387				&82I&D02	
6			BOX-CNSL,RR																		
	96615479		04	06		B	B	B	.	X	X		1							&82I&D02	
9			SCREW																		
	94520326		04	06		B	B	B	X	X	X		2								
	94520326		04	06		B	B	B	X	X	X		2								
10			LINING-INSERT,CNSL																		
	96615453		04	04		B	.	.	X	X	X		1				850264				
O	96615452		04	06		B	B	B	X	X	X		1			850265					
11			HOUSING A-ASHTRAY,CNSL																		
	96615485		04	06		B	B	B	.	X	X		1							&82I&UR7	
12			TRAY A-ASHTRAY CNSL,RR																		
	96615487		04	06		B	B	B	.	X	X		1							&82I&UR7	
13			SCREW																		
	94520326		04	06		B	B	B	X	X	X		2								
15			MAT-CNSL BODY																		
	96615507		04	06		B	B	B	X	.	.		1							&82I&D01	
	96615509		04	06		B	B	B	.	X	X		1							&82I&D02	
16			BOOT A-P/BRAKE																		
	96615480		04	06		B	B	B	X	X	X		1								
17			SCREW																		
	94520163		04	06		B	B	B	X	X	X		4								
18			BOLT																		
	94501375		04	06		B	B	B	X	X	X		2								
19			CAP A-CNSL																		
	96455421		04	06	L	B	B	B	X	X	.		1							&ML4	
	96455418		04	06	L	B	B	B	.	X	X		1							&MM9	
	96498355		04	06	R	B	B	B	X	X	.		1							&ML4	
	96498340		04	06	R	B	B	B	.	X	X		1							&MM9	
20			CAP-CNSL,AUTOMATIC																		
	96615451		04	06		B	B	B	X	X	X		1							&82I	
29			BOOT A-FRT CNSL,M/T																		
	96615460		04	06		B	B	B	X	X	X		1							&MG4/MG5	
30			COVER-BLANK,ASHTRAY,RR																		
	96615491		04	06		B	B	B	X	X	.		1							&82I-UR7	
35			BRACKET A-CNSL,RR																		
	96554730		04	06		B	B	B	X	X	X		1								
43			HOLDER A-CUP																		
	96615493		04	06		B	B	B	X	X	X		1							&82I	
45			CONSOLE A-FRT																		
	96404037		04	06	L	B	B	B	X	X	X		1		DQ					&82I&MG4/MG5-UL1	
	96404052		04	06	L	B	B	B	X	X	X		1		DE					&82I&ML4-UL1	
	96404046		04	06	L	B	B	B	.	X	X		1		DC					&82I&MM9-UL1	
	96615419		04	06	L	B	B	B	X	X	X		1		AQ					&82I&MG4/MG5&UL1	
	96615425		04	06	L	B	B	B	X	X	.		1		AE					&82I&ML4&UL1	
	96615439		04	06	L	B	B	B	.	X	X		1		AC					&82I&MM9&UL1	
	96404055		04	06	R	B	B	B	X	X	X		1		DF					&82I&MG4/MG5-UL1	
	96404067		04	06	R	B	B	B	X	X	.		1		DK					&82I&ML4-UL1	
	96404061		04	06	R	B	B	B	.	X	X		1		DH					&82I&MM9-UL1	
	96615427		04	06	R	B	B	B	X	X	X		1		AF					&82I&MG4/MG5&UL1	
	96615433		04	06	R	B	B	B	X	X	.		1		AK					&82I&ML4&UL1	
	96615443		04	06	R	B	B	B	.	X	X		1		AH					&82I&MM9&UL1	
50			SWITCH A-HOLD MODE																		
	96550957		04	06	L	B	B	B	X	X	X		1							&ML4/MM9	
	96550958		04	06	R	B	B	B	X	X	X		1							&ML4/MM9	
57			SCREW																		
	94520315	AD	05	06		B	B	B	X	X	X		2							&D02	
61			CONSOLE A-RR																		
	96615465		04	04		B	.	.	X	.	.		1		QB		933129			&82I&D01-UR7	
O	96451479		04	06		B	B	B	X	.	.		1		QG	933130				&82I&D01-UR7	
	96425941		04	06		B	B	B	.	X	.		1		D3					&82I&D02-UR7	
	96615467		04	05		B	B	B	.	X	X		1		QC		072386			&82I&D02&UR7	
O	96425935		04	06		B	B	B	.	X	X		1		D1	072387				&82I&D02&UR7	
71			SOCKET A-ADAPTER																		
	96482587		04	06		B	B	B	X	X	X		1							&UL1	
75			COVER-BLANK,PWR SOCKET																		
	96615336		04	06		.	B	.	X	X	X		1							&82I-UL1	
79			CAP-CNSL,RR																		
	96615505		04	06		B	B	B	X	X	X		1							&82I	
83			SCREW																		
	94520163		04	06		B	B	B	.	X	X		6								
85			BRACKET A-CNSL,FRT																		
	96398595		04	06		B	B	B	X	X	X		1								

LACETTI <WESTERN EUROPE>
CONSOLE

KEY NO.			PART NAME																		
						MODEL										EFFECTIVE POINT					
						BODY			LEVEL							VIN1		VIN2			
ITC	PART NO.	CHG	MYF	MYT	DRV	4N	4H	5W	I	II	III	L/R	QTY	PNC	P/CODE	FROM	TO	FROM	TO	OPTION	REMARKS
	92		BOX-CUP HOLDER																		
	96615503		04	06		B	B	B	X	X	X		1							&82I	
	93		CONSOLE-FRT,UPR																		
	96615444		04	06		B	B	B	X	X	X		1								
	94		CONSOLE-FRT,LWR																		
	96615447		04	06	L	B	B	B	X	X	X		1							&82I	
	96615449		04	06	R	B	B	B	X	X	X		1							&82I	
	95		W/HARNESS-CONSOLE																		
	96347325		04	06		B	B	B	X	X	X		1		99					&ML4/MM9&UL1	
	96347324		04	06		.	B	.	X	X	X		1		98					&ML4/MM9-UL1	