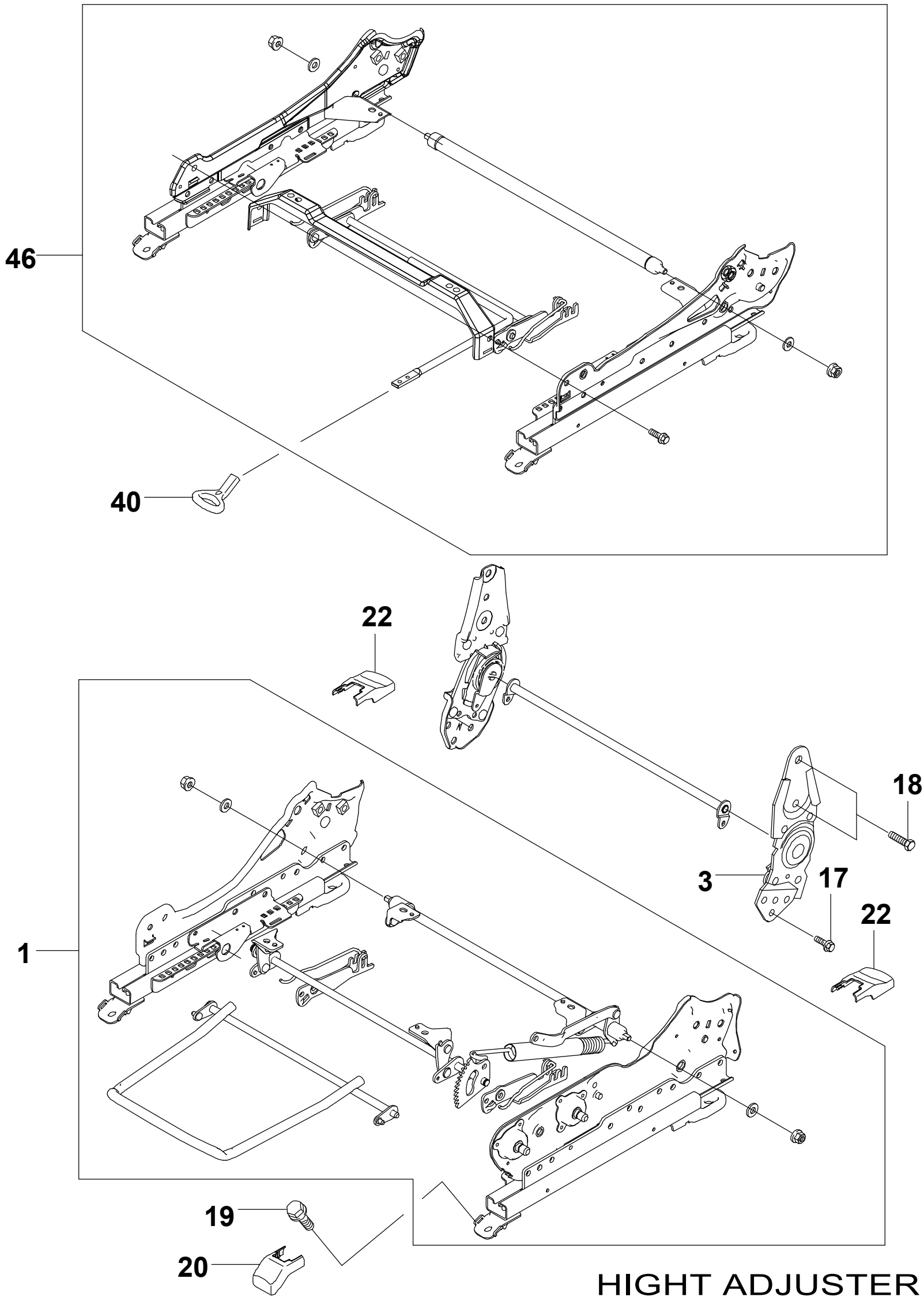

RJ7530W 10/30/2004

SEAT GUIDE RAIL

KEY NO.			PART NAME																		
						MODEL									EFFECTIVE POINT						
						BODY			LEVEL						VIN1		VIN2				
ITC	PART NO.	CHG	MYF	MYT	DRV	4N	4H	5W	I	II	III	L/R	QTY	PNC	P/CODE	FROM	TO	FROM	TO	OPTION	REMARKS
1	ADJUSTER A-HEIGHT,FRT SEAT																				
	96479951		04	06	L	B	B	B	X	X	X	LH	1							&AQ6	
	96479952		04	06	R	B	B	B	X	X	X	RH	1							&AQ6	
3	RECLINER A-FRT SEAT																				
	96249909		04	06		B	B	B	X	X	X		4							&AQ6	
17	BOLT																				
	94501494		04	06		B	B	B	X	X	X		8							&AQ6	
18	BOLT																				
	94501495		04	06		B	B	B	X	X	X		8							&AQ6	
19	BOLT																				
	94501418		04	06		B	B	B	X	X	X		8								
20	PIECE-END,FRT SEAT,FRT																				
	96616551		04	06		B	B	B	X	X	X		2							&82I	
22	PIECE-END,FRT SEAT,RR																				
	96616553		04	06		B	B	B	X	X	X		4							&82I	
40	KNOB-G/RAIL,FRT SEAT																				
	96616517		04	06	L	B	B	B	.	X	X	RH	1							&82I&AN3	
	96616515		04	06	R	B	B	B	.	X	X	LH	1							&82I&AN3	
46	RAIL A-GUIDE,FRT SEAT																				
	96496350	CH	04	06		B	B	B	X	.	.	LH	1							&AQ6-AN3	
	96479947	CH	04	06		B	B	B	.	X	X	LH	1							&AN3&AQ6	
	96496351	CH	04	06		B	B	B	X	.	.	RH	1							&AQ6-AN3	
	96479948	CH	04	06		B	B	B	.	X	X	RH	1							&AN3&AQ6	