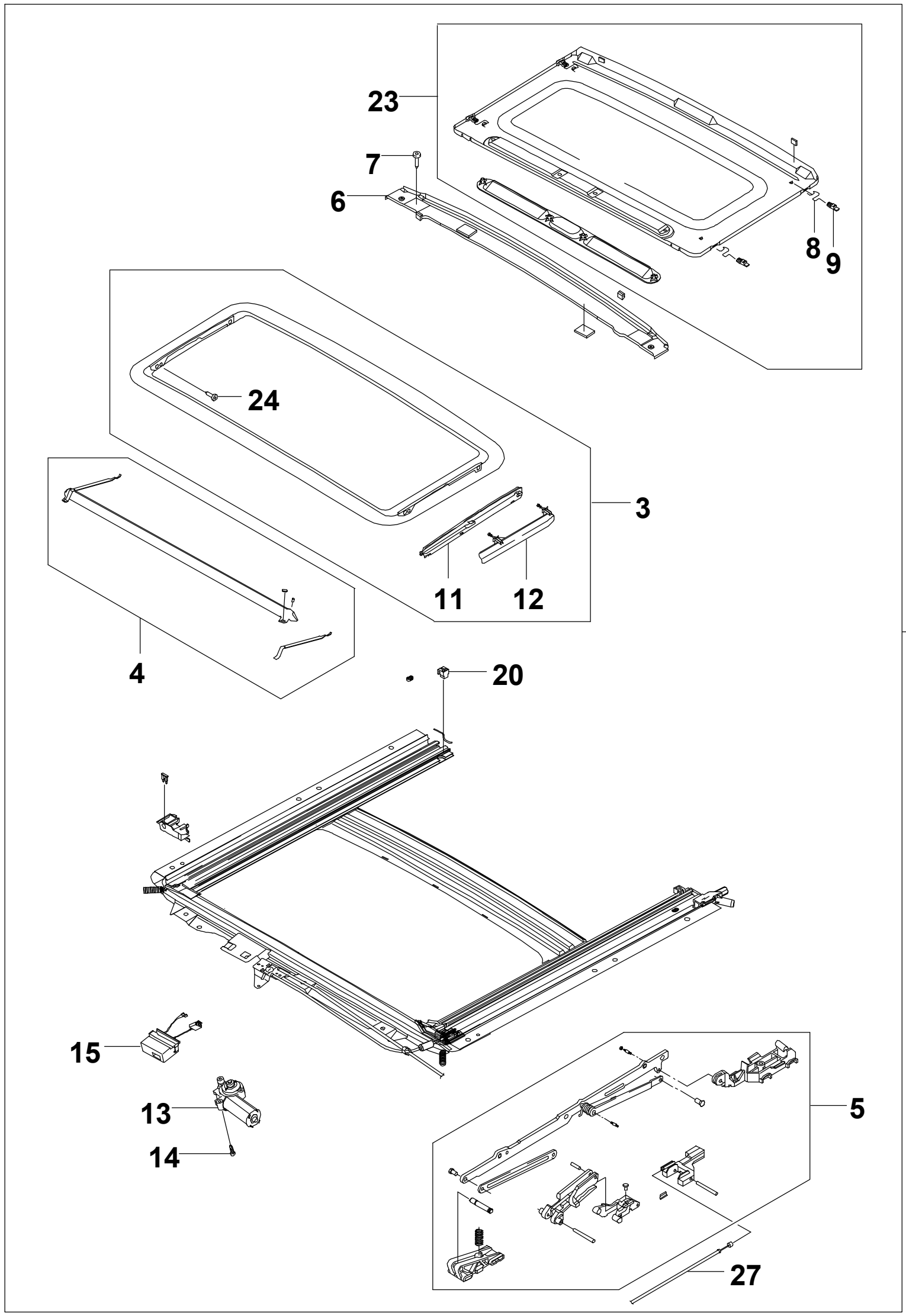

RJ9250 10/30/2004

LACETTI <WESTERN EUROPE>
SUN ROOF

	KEY NO.		PART NAME																		
						MODEL										EFFECTIVE POINT					
						BODY			LEVEL							VIN1		VIN2			
	ITC	PART NO.	CHG	MYF	MYT	DRV	4N	4H	5W	I	II	III	L/R	QTY	PNC	P/CODE	FROM	TO	FROM	TO	OPTION	REMARKS
	1			ROOF A-SUN																		
		96614616		04	04		B	.	.	X	X	X		1				898189			&82I&CF6	
	O	96617517		04	06		B	.	B	X	X	X		1		CC	898190				&82I&CF6	
		96617537		04	06		.	B	.	X	X	X		1		FF					&82I&CF6	
	3			GLASS A-PNL																		
		96427651		04	06		B	B	B	X	X	X		1							&CF6	
	4			DEFLECTOR-WDO																		
		96404812		04	06		B	B	B	X	X	X		1							&CF6	
	5			MECHANISM																		
		96404813		04	06		B	B	B	X	X	X	LH	1							&CF6	
		96404814		04	06		B	B	B	X	X	X	RH	1							&CF6	
	6			CHANNEL-DRAIN																		
		96404815		04	06		B	B	B	X	X	X		1							&CF6	
	7			SCREW																		
		96404816		04	06		B	B	B	X	X	X		2							&CF6	
	8			SPRING-SLIDE BLOCK																		
		96404817		04	06		B	B	B	X	X	X		4							&CF6	
	9			BLOCK-SLIDE																		
		96404818		04	06		B	B	B	X	X	X		4							&CF6	
	11			COVER-SIDE,INR																		
		96404819		04	06		B	B	B	X	X	X	LH	1							&CF6	
		96404820		04	06		B	B	B	X	X	X	RH	1							&CF6	
	12			COVER-SIDE,OTR																		
		96404821		04	06		B	B	B	X	X	X	LH	1							&CF6	
		96404822		04	06		B	B	B	X	X	X	RH	1							&CF6	
	13			MOTOR&DRIVE GEAR A																		
		96404823		04	06		B	B	B	X	X	X		1							&CF6	
	14			SCREW																		
		96404824		04	06		B	B	B	X	X	X		1							&CF6	
	15			BOX A-RELAY																		
		96404825		04	06		B	B	B	X	X	X		1							&CF6	
	20			STOPPER-SUNSHADE,RR																		
		96404826		04	06		B	B	B	X	X	X		1							&CF6	
	23			SUNSHADE A-SUN ROOF																		
		96404828		04	06		B	B	B	X	X	X		1							&82I&CF6	
	24			BOLT																		
		96404829		04	06		B	B	B	X	X	X		1							&CF6	
	27			CABLE A-DRIVE SUNROOF																		
		96404830		04	06		B	B	B	X	X	X		2							&CF6	